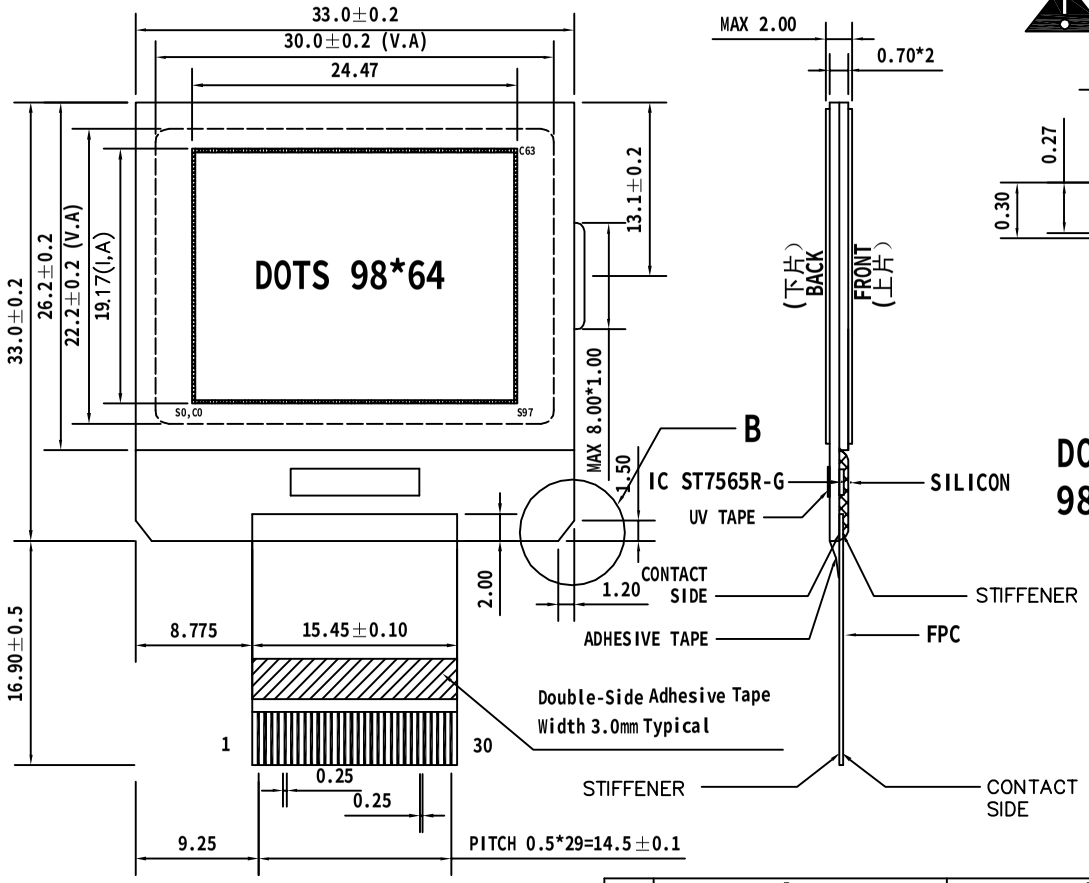

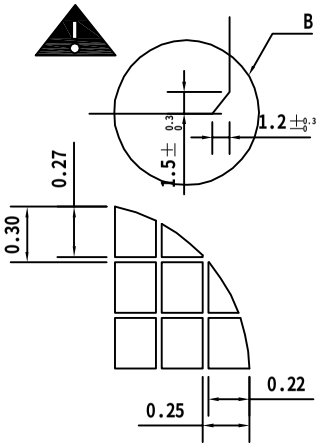

DOTS DETAIL
98*64 DOTS

LCD	IC
C0-C63	COM0-COM63
S0-S97	SEG0-SEG97

PIN ASSIGNMENT

1	PS
2	C68
3	VR
4	V0
5	V1
6	V2
7	V3
8	V4
9	C2-
10	C2+
11	C1+
12	C1-
13	C3+
14	NC
15	VOUT
16	VSS
17	VDD
18	DB7
19	DB6
20	DB5
21	DB4
22	DB3
23	DB2
24	DB1
25	DB0
26	E-RDB
27	RW-WRB
28	A0
29	RST
30	CS1B

TABLE1:

	R	F	T
Y	POSITIVE REFLECTIVE YELLOW-GREEN STN	POSITIVE TRANSFLECTIVE YELLOW-GREEN STN	POSITIVE TRANSMISSIVE YELLOW-GREEN STN
G	POSITIVE REFLECTIVE GRAY STN	POSITIVE TRANSFLECTIVE GRAY STN	POSITIVE TRANSMISSIVE GRAY STN
B		NEGATIVE TRANSFLECTIVE BLUE STN	NEGATIVE TRANSMISSIVE BLUE STN
W		NEGATIVE TRANSFLECTIVE BLACK-WHITE STN	NEGATIVE TRANSMISSIVE BLACK-WHITE STN
F	POSITIVE REFLECTIVE FSTN	POSITIVE TRANSFLECTIVE FSTN	POSITIVE TRANSMISSIVE FSTN

NOTES:
1. VIEWING ANGLE: 6:00 O'CLOCK
2. DISPLAY MODE:as shown in table1
3. DRIVING VOLTAGE: 9.6V,DUTY:1/64,BIAS:1/9,FREQUENCY:64Hz
4. OPERATING TEMP.:-20° C TO 70° C
5. STORAGE TEMP.:-30° C TO 80° C
6. CONNECTOR TYPE:COG&FPC

VER.	MODIFY CONTENTS	DATE	DESIGN
6			
5			
4			
3			
2			
1			

XIAMEN OCULAR TECHNOLOGY CO.,LTD

PART NO. GDSEC-YGBWF R F-9864WM-03
DESIGN BY CSL 01/12-09
CHECKED BY
APP BY

TOLERANCES UNLESS OTHERWISE STATED
.X ±0.20
.XX ±0.10 ANGLES±1°
ALL DIMENSIONS IN MM UNLESS OTHERWISE STATED
CUSTOMER:XMO

APPLICATION:
☐Instrument ☐Audio Equipments ☐Watch&Clock
☐Telephone ☐Automobile ■Other
☐Home Appliances ☐Air-condition
SAMPLE: ☐Yes ■No

COMPOSE TYPE:
☐NORM X-STEP: " # MM "
☐ALONG Y-STEP: " # MM "

SHEET 1 OF 2